OIL PUMP ASSY (1CD–FTV)

COMPONENTS

17046–01

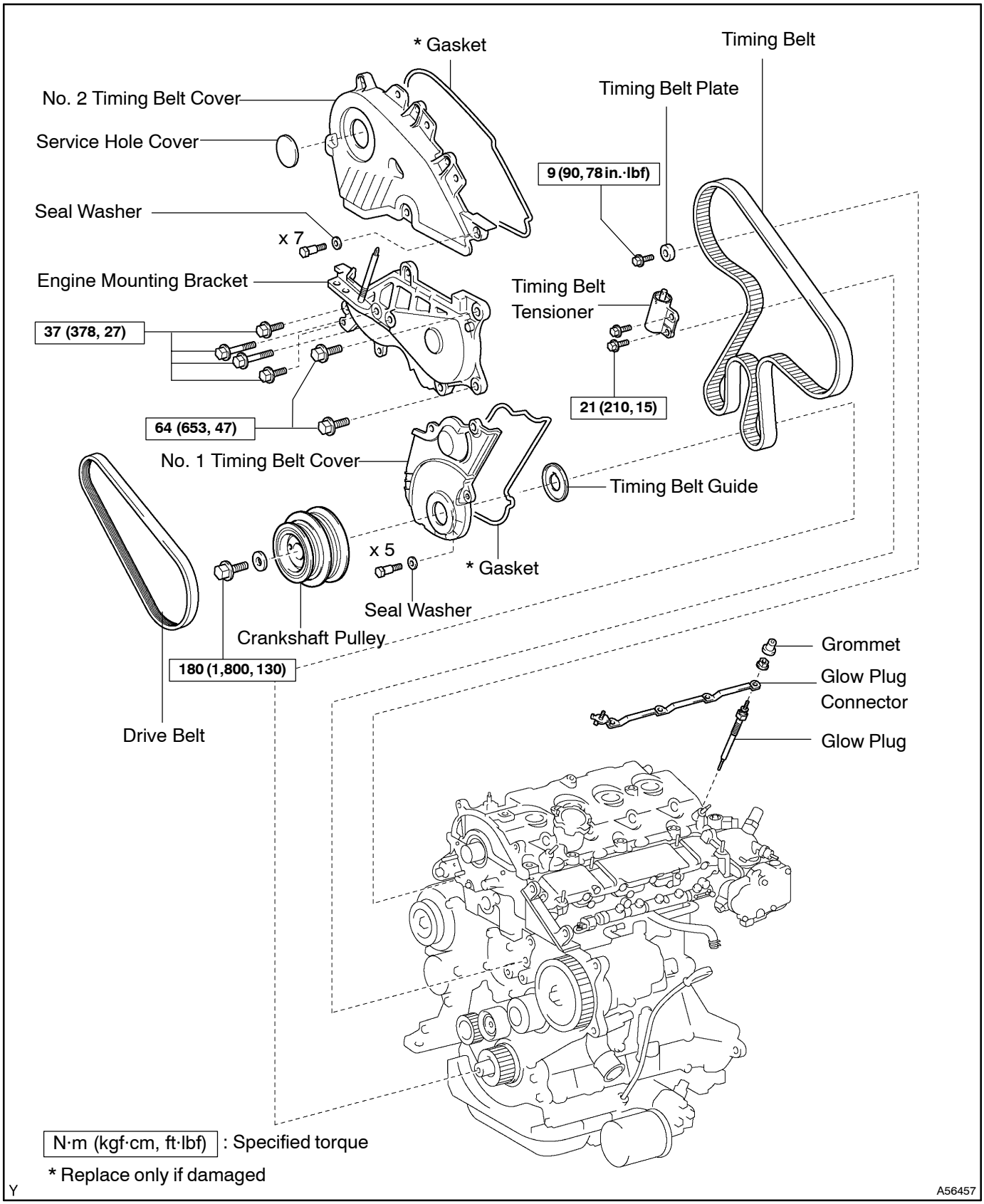

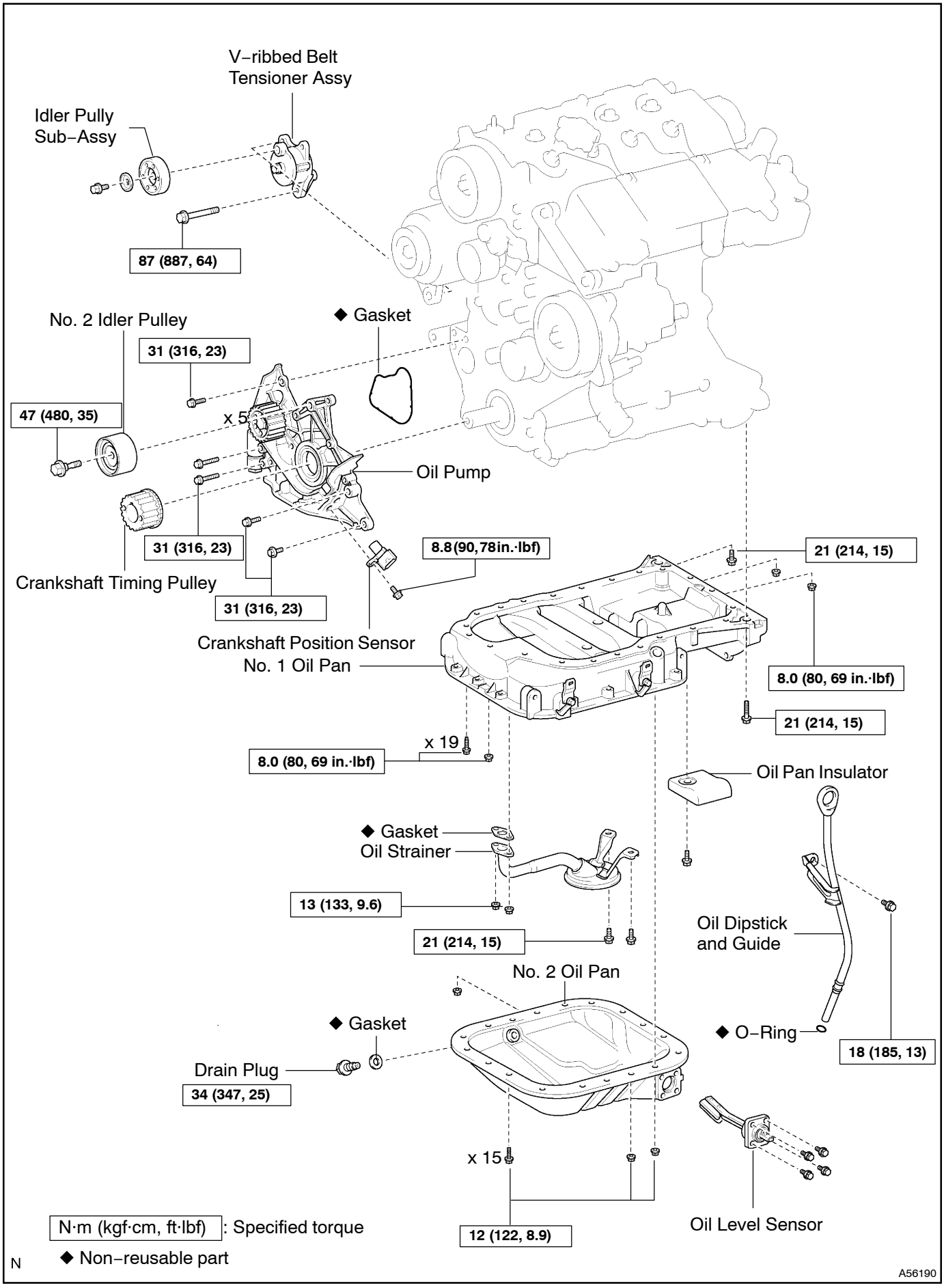
V–ribbed Belt Tensioner Assy
Idler Pully Sub–Assy
87 (887, 64)
No. 2 Idler Pulley
◆ Gasket
31 (316, 23)
47 (480, 35)
x 5
Oil Pump
31 (316, 23)
8.8(90,78in.·lbf)
21 (214, 15)
Crankshaft Timing Pulley
31 (316, 23)
Crankshaft Position Sensor
No. 1 Oil Pan
8.0 (80, 69 in.·lbf)
21 (214, 15)
x 19
8.0 (80, 69 in.·lbf)
Oil Pan Insulator
◆ Gasket
Oil Strainer
13 (133, 9.6)
21 (214, 15)
Oil Dipstick and Guide
No. 2 Oil Pan
◆ Gasket
◆ O–Ring
18 (185, 13)
Drain Plug
34 (347, 25)
x 15
12 (122, 8.9)
Oil Level Sensor
N·m (kgf·cm, ft·lbf) : Specified torque
◆ Non–reusable part
N
A56190